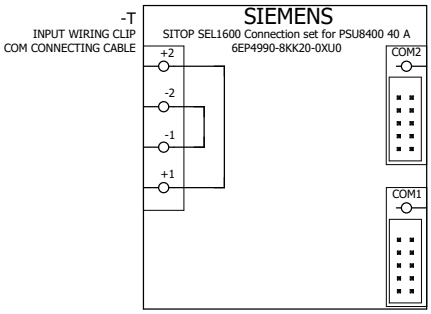

SIEMENS	6EP4990-8KK20-0XU0_MULTI_UWD_ANSI
	FORMAT/SIZE: B-SIZE PORTRAIT 17" x 11" GRID 4 mm