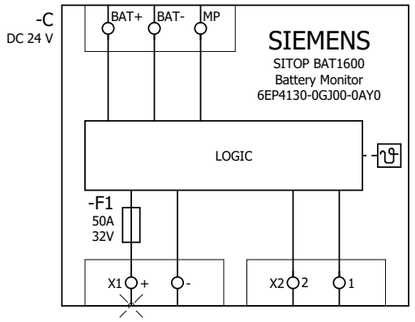

SIEMENS	6EP4130-0GJ00-0AY0_MULTI_UWD_IEC
	FORMAT / SIZE: ISO DIN A3 LANDSCAPE H420mm W297mm GRID 4