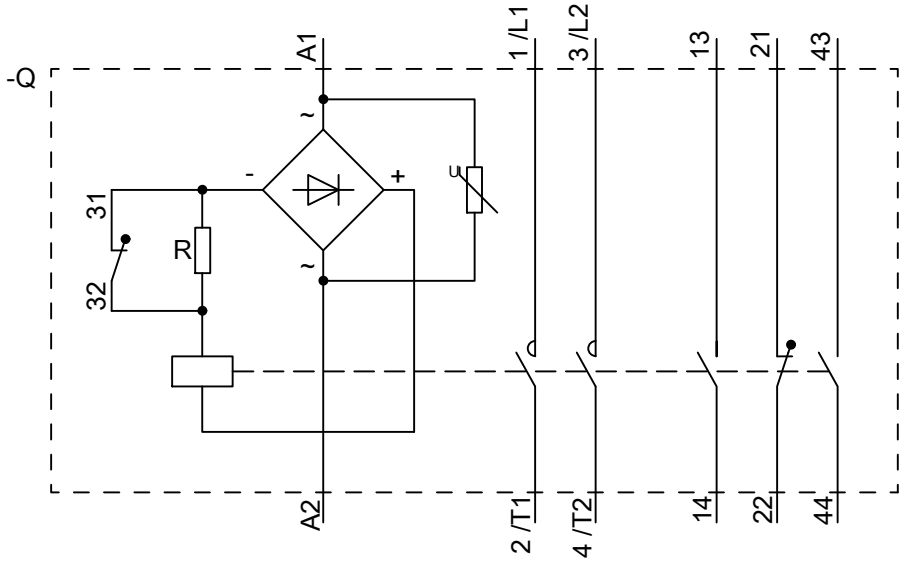

SIEMENS	3TC4(4,8)17-0C.4_IEC.DXF
	Format / Size: Hybrid quer